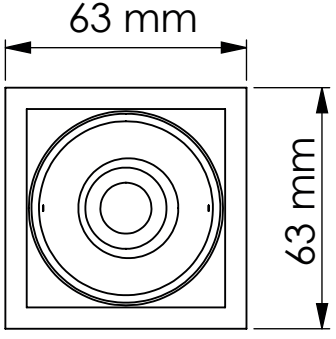
63 mm
63 mm

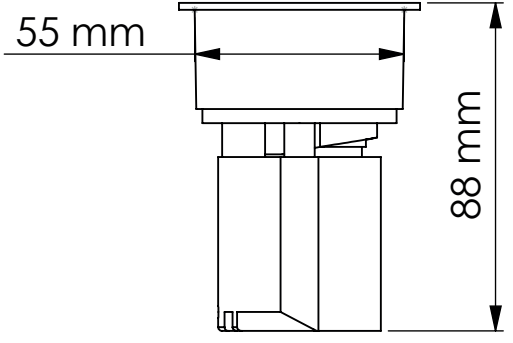
55 mm
88 mm

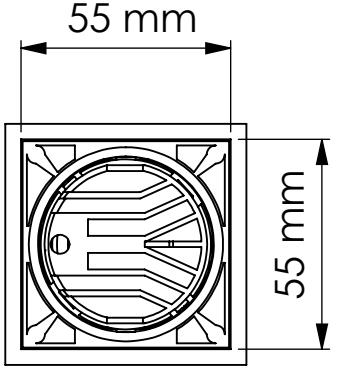
55 mm
55 mm