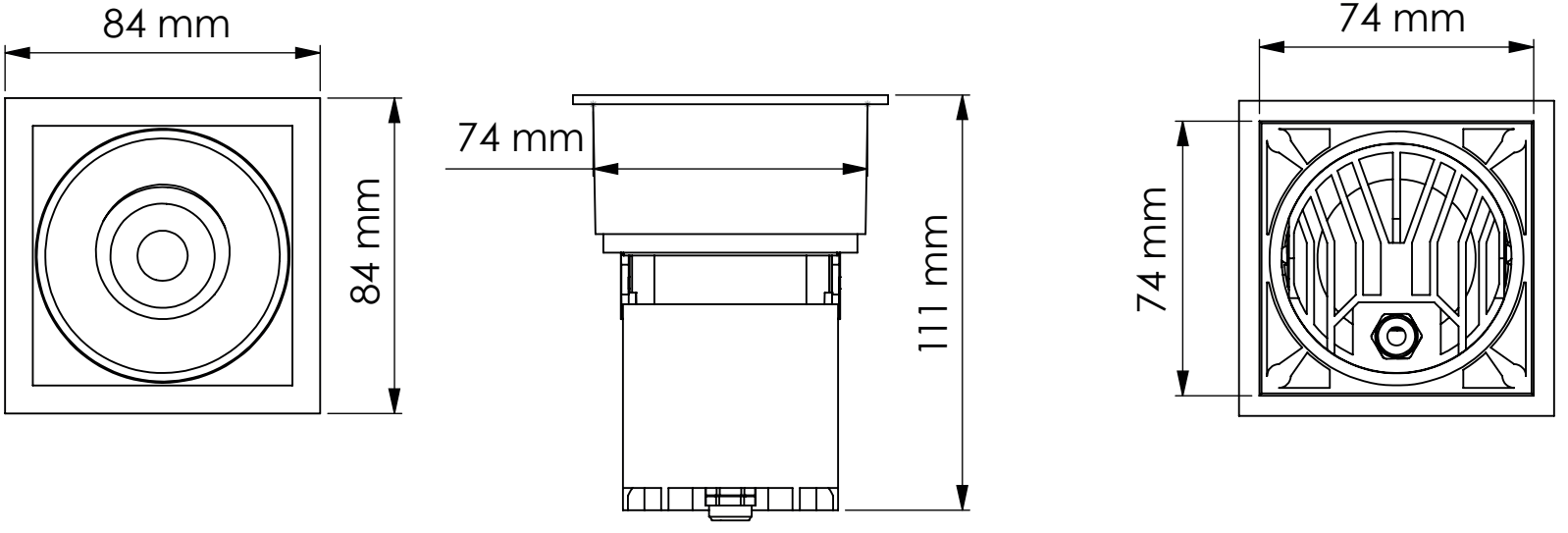
84 mm
84 mm
74 mm
111 mm
74 mm
74 mm